Technical Data

SPENCE ENGINEERING COMPANY, INC. 150 COLDENHAM ROAD, WALDEN, NEW YORK, 12586-2035

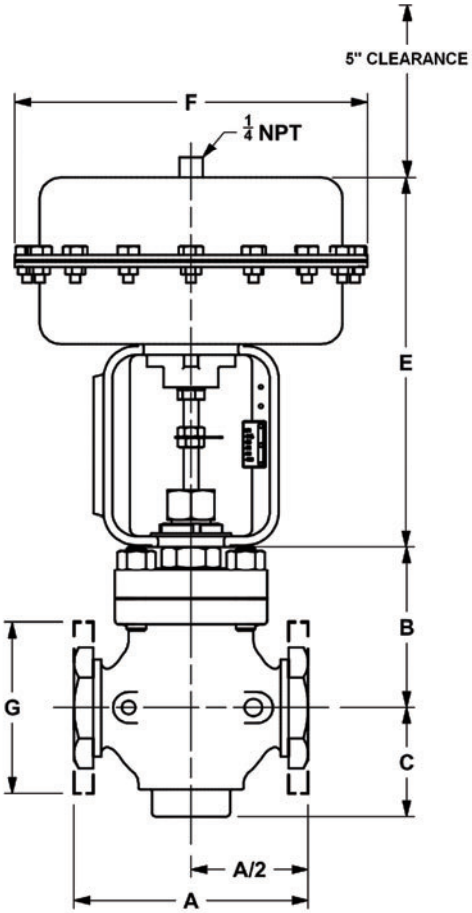

CENTAUR TYPE C

CONTROL VALVE

Pressures to 740 PSIG
Temperatures to 800°F

SPECIFICATION

The Centaur Series C Control Valve has been designed for steam, water, gas and process applications in typical institutional, commercial and industrial processes. The Centaur is available with either a direct or reverse acting actuator and meets most installation requirements.

APPLICATIONS

- Process control systems for food, pulp and paper, chemical, petrochemical and refining, and other industries.
- HVAC systems
- Feed water and fuel system controls for boiler rooms
- Packaged (OEM) systems such as heat exchangers, water purification systems, metal cleaning and plating systems
- Upgrade regulator installations for greater rangeability

MAXIMUM RATED FLOW COEFFICIENTS (Cv)

Valve Size (in.)							
½	¾	1	1½	2	2½	3	4
4.9	8.6	15.2	31	57	85	122	174

DIMENSIONS inches(mm) AND WEIGHTS pounds(kg)

Size	A				B		C	E		F		G		Valve, Wt.			Act., Wt.	
	NPT	125 / 150	250	300	CI	CS		#36	#60	#36	#60	125 / 150	250 / 300	NPT	125 / 150	250 / 300	#36	#60
½ (12)	4⅜ (111)	-	-	-	3 1/16 (78)	2 15/16 (75)	2 (51)	9⅞ (251)	11⅞ (302)	9¼ (235)	11¼ (286)	-	-	6 (3)	-	-	17 (8)	30 (14)
¾ (19)	4¾ (121)	-	-	-	3 5/16 (84)	3 3/16 (81)	2⅛ (54)	9⅞ (251)	11⅞ (302)	9¼ (235)	11¼ (286)	-	-	8 (4)	-	-	17 (8)	30 (14)
1 (25)	5⅜ (137)	5½ (140)	6 (152)	6½ (165)	3 13/16 (96)	3 13/16 (96)	2½ (64)	9⅞ (251)	11⅞ (302)	9¼ (235)	11¼ (286)	4¼ (108)	4⅞ (124)	10 (5)	13 (6)	18 (8)	17 (8)	30 (14)
1½ (38)	7¼ (184)	6⅞ (175)	7⅜ (187)	8 (203)	4 9/16 (115)	4½ (114)	3 (76)	9⅞ (251)	11⅞ (302)	9¼ (235)	11¼ (286)	5 (127)	6⅛ (155)	18 (8)	22 (10)	30 (14)	17 (8)	30 (14)
2 (51)	7½ (191)	8½ (216)	9 (229)	10¼ (260)	5⅛ (130)	5 1/16 (128)	3½ (89)	9⅞ (251)	11⅞ (302)	9¼ (235)	11¼ (286)	6 (152)	6½ (165)	27 (12)	38 (17)	43 (20)	17 (8)	30 (14)
2½ (64)	-	9⅜ (238)	10 (254)	11¼ (286)	5⅜ (137)	5⅜ (137)	3 13/16 (98)	9⅞ (251)	11⅞ (302)	9¼ (235)	11¼ (286)	7 (178)	7½ (191)	-	40 (18)	-	17 (8)	30 (14)
3 (76)	-	10 (254)	10¾ (273)	12¼ (311)	6½ (165)	6½ (165)	4 11/16 (119)	9⅞ (251)	11⅞ (302)	9¼ (235)	11¼ (286)	7½ (191)	8¼ (210)	-	61 (28)	-	17 (8)	30 (14)
4 (102)	-	11⅞ (302)	12½ (318)	12½ (318)	7 7/16 (188)	7 7/16 (188)	6½ (165)	9⅞ (251)	11⅞ (302)	9¼ (235)	11¼ (286)	9 (229)	10 (254)	-	115 (52)	-	17 (8)	30 (14)

*Weights are approximate.

OPERATING PRINCIPLE

The Centaur Series C Control Valve is a flow to open, globe style, pneumatic diaphragm actuated control valve. It can be arranged to operate with either air to close or air to open control. A controller sensing the controlled variable provides an air signal to the actuator of the control valve to obtain the desired control.

RECOMMENDED INSTALLATION

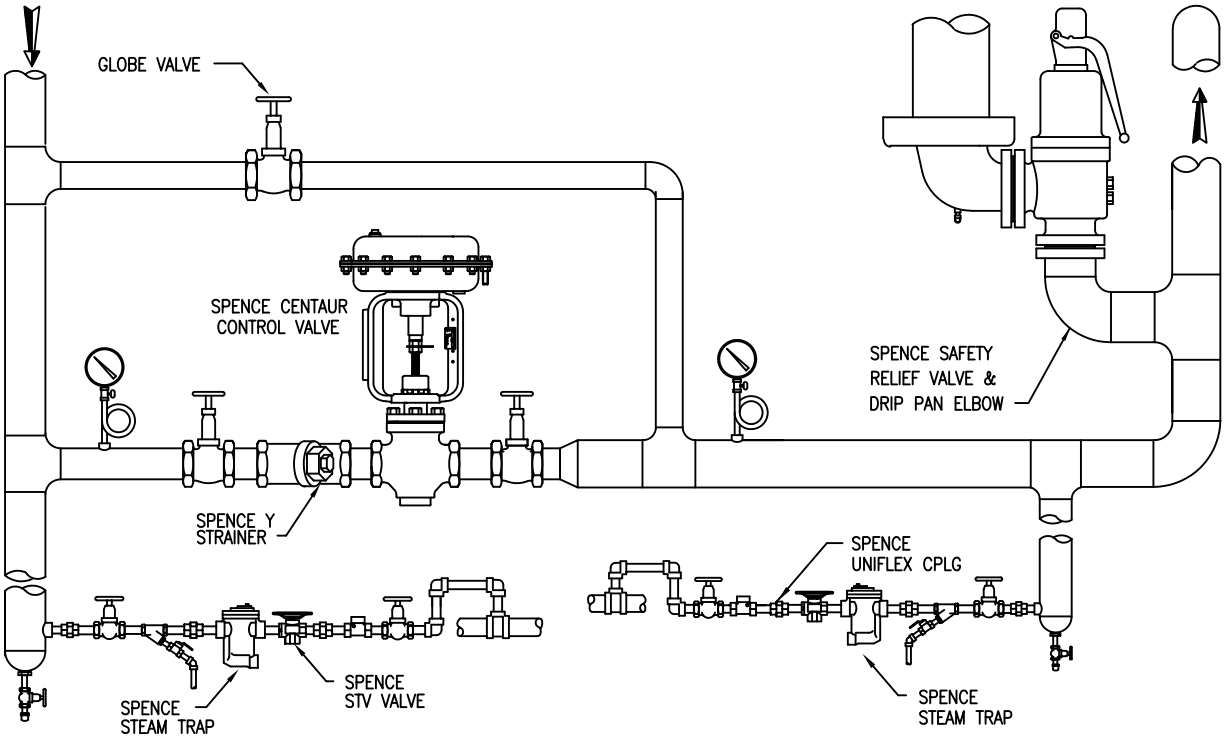

Figure 1 - Typical Steam Installation

INSTALLATION

CAUTION !

The piping system must be adequately designed and supported to prevent extraordinary loads to the pressure equipment.

Locate the valve in a straight run of horizontal pipe as shown in Figure 1. The valve should be mounted with the actuator in the upright position. Allow room for removal of the actuator. Prevent pipeline hammering in compressible fluid service by providing proper drainage before and after the valve. Avoid damaging effects of scale and dirt in pipelines by using a strainer. A 3-valve by-pass to facilitate inspection and maintenance without interrupting service is recommended. To eliminate excessive noise with steam and other compressible fluids, enlarge the delivery pipe size to allow a reasonable flow velocity at the reduced pressure. A concentric transition is recommended. If possible, avoid sharp turns close to the valve. Install upstream and downstream pressure gauges to indicate performance. If the rating of the delivery system or connected equipment is less than the initial pressure, provide a safety relief valve.

STARTUP AND SETTING

Flush the piping system thoroughly to clear it of welding beads,scale, sand, etc. Install the valve with the arrow on the side of the valve body pointing in the direction of fluid flow. Screwed end valves should be mounted between unions. Install controller and accessories in accordance with instructions furnished by the manufacturer of these items. Connect necessary air lines and/or electrical connections to the diaphragm chamber and valve mounted accessories. Use 1/4" O.D. tubing for all air lines. If the length of the air line exceeds 25 ft, use 3/8" O.D. tubing. Insulation, may be applied to the valve body only. Do not insulate the bonnet. Caution: The valve may be handling hazardous fluids. Only qualified personnel, who are familiar with your installation, should be permitted to install, readjust, inspect or maintain the valve.

ACTUATOR SHUTOFF TABLE

Port Size	Orifice	Travel	Actuator Size	Bench Range	Actuator Code	Reverse Shutoff			Bench Range	Actuator Code	Direct Shutoff		
						3-15	0-20	0-30			3-15	0-20	0-30
1/2	T	3/4	36	5-15	RC	85	325	-	3-10	DD	350	740	-
				8-15	RD	190	450	-	3-5	DE	650	740	-
				10-15	RE	440	675	-	-	-	-	-	-
3/4	T	3/4	36	8-15	RD	300	450	-	3-10	DD	175	400	-
				10-15	RE	350	575	-	3-5	DE	375	650	-
			60	8-15	RG	300	650	-	3-11	DG	200	650	-
				10-15	RH	510	740	-	3-8	DH	650	740	-
				12-15	RQ	740	-	-	-	-	-	-	-
1	T	3/4	36	8-15	RD	155	225	-	3-10	DD	175	315	-
				10-15	RE	225	330	-	3-5	DE	325	475	-
			60	8-15	RG	240	400	-	3-11	DG	175	400	-
				10-15	RH	390	525	-	3-8	DH	350	600	-
				12-15	RQ	425	600	-	-	-	-	-	-
1-1/2	T	3/4	36	-	-	-	-	-	3-10	DD	85	160	-
				10-15	RE	90	150	-	3-5	DE	135	205	-
			60	8-15	RG	100	175	-	3-11	DG	85	200	-
				10-15	RH	150	225	-	3-8	DH	175	300	-
				12-15	RQ	195	285	-	-	-	-	-	-
				22-30	RT	-	-	450	-	-	-	-	-
2	T	3/4	60	12-15	RQ	115	150	-	3-11	DG	45	80	-
				22-30	RT	-	-	200	3-8	DH	100	150	-
2-1/2	T	3/4	60	10-15	RH	75	100	100	3-8	DH	70	125	200
				12-15	RQ	90	125	125	-	-	-	-	-
				22-30	RT	-	-	175	-	-	-	-	-
3	T	3/4	60	10-15	RH	40	60	-	3-8	DH	40	65	100
				12-15	RQ	60	80	-	-	-	-	-	-
				22-30	RT	-	-	110	-	-	-	-	-
4	T	3/4	60	12-15	RQ	20	32	-	3-8	DH	10	15	25
				22-30	RT	-	-	50	-	-	-	-	-

ACTUATOR SELECTION

- Select 'Reverse' for air to open, fail closed and 'Direct' for air to close, fail open applications.
- For optimum installed span, select actuator code with shutoff pressure greater than, but closest to valve inlet pressure.

  Example: For a Centaur 1" valve inlet pressure of 200psi. Recommended 'Reverse' acting actuator code would be 'RE' and require a 3-15psi signal for actuation.
- NOTE: Do not exceed 60psi air signal to actuator.

Cv TABLE

SIZE	PERCENT OF TRAVEL										
	5	10	20	30	40	50	60	70	80	90	100
1/2	0.20	0.32	1.25	2.0	2.5	2.9	3.4	4.0	4.4	4.7	4.9
3/4	0.7	1.6	3.6	4.8	5.3	5.8	6.4	7	7.7	8.2	8.6
1	1.7	2.1	3.3	6.1	10.0	12.2	13.6	14.6	15	15.1	15.2
1-1/2	2.5	5.9	13.5	19.6	24	27	29	30	30	31	31
2	4.7	9.7	21	32	40	46	51	54	55	56	57
2-1/2	5.00	10.5	25	39	52	63	72	80	82	84	85
3	7.7	15.0	32	49	69	86	97	108	118	121	122
4	7.3	16.0	37	59	81	100	121	139	155	166	174

PRESSURE RECOVERY FACTOR

For Gas: X_T=0.7 - For Liquid: F_L=0.9

PRODUCT IDENTIFICATION

ORDERING CODE

Model		Orifice	Size	tions	Trim	Packing		Bench Range		Positioner		Positioner Set		Accessories			Inlet Pressure		
C	1	T	D	9	1	1	-	R	C	A	A	0	1	0	1	-	1	2	3
1	2	3	4	5	6	7		8	9	10	11	12	13	14	15		16	17	18

Model -
Position 1 & 2
C1 = Cast Iron
C2 = Carbon Steel

Orifice -
Position 3
T = Full

Size -
Position 4
C = 1/2"
D = 3/4"
E = 1"
G = 1-1/2"
H = 2"
J = 2-1/2"
K = 3"
L = 4"

Connections -
Position 5
1 = 125/150# FLG
3 = 250/300# FLG
9 = Threaded NPT

Trim -
Position 6
1 = Metal

Packing -
Position 6
1 = V-Ring
2 = Graphite
3 = Hi Temp

Bench Range -
Position 8 & 9
AA = None
DD = 3-10 Dir 36
DE = 3-6 Dir 36
RC = 5-15 Rev 36
RD = 8-15 Rev 36
RE = 10-15 Rev 36
DF = 3-10 Dir 60
DG = 3-11 Dir 60
DH = 3-8 Dir 60
RG = 8-15 Rev 60
RH = 10-15 Rev 60
RK = 20-60 Rev 60
RQ = 12-15 Rev 60
RT = 22-30 Rev 60

Positioner -
Position 10 & 11
AA = None
EI = Eckhardt I/P
EP = Eckhardt P
MI = Moore I/P
MP = Moore P
MS = Siemens Smart w/ "HART" Bus
MT = Siemens Smart w/ "Profibus"
4P = PMV P4 P
5I = PMV P5 I/P
5P = PMV P5 P

Positioner Set -
Position 12 & 13
1 = None
2 = 3-15 / 4-20 mA
3 = 3-9 / 4-12 mA*
4 = 9-15 / 12-20 mA*

* = Split Range

Accessories -
Position 14 & 15
01 = None
02 = Limit Switch
03 = Posit. Transm.
04 = SS Tubing

Inlet Pressure -
Position 16, 17 & 18
__ __ __ = Actual Inlet

TROUBLESHOOTING

For troubleshooting of the controlling device and accessories,see the instruction furnished by the manufacturer of these items. To troubleshoot the valve and actuator, check for the following:change in operating conditions; pneumatic signal failure; diaphragm failure; foreign matter wedged between seat ring and plug; actuator vent plug may be: plugged, missing, replaced with a solid plug; packing leakage.

Graphite packing/Hi Temp Graphite Packing – Fig. 3
If packing (40) / (41) leaks, tighten packing nut as necessary until leakage stops. Over-tightening of packing nut may cause erratic operation. Install additional center packing rings. This can be accomplished by loosening packing nut (37). Lift packing nut, gland and end packing ring a sufficient height on stem and plug assembly to apply packing ring. Insert one skive cut center packing ring over diameter of stem and plug assembly into packing box. Replace end packing ring and tighten packing nut as necessary to stop leakage. Replace packing.

Teflon Packing – Fig. 3
If the packing (39) leaks, isolate and depressurize the valve. Check the stem for gouges and that the o-ring is properly seated. Install replacement packing, if necessary, then return the valve to service.

It is solely the responsibility of the system designer and the user to select products and materials suitable for their specific application requirements, and to ensure proper installation, operation and maintenance of these products. Assistance shall be afforded with the selection of materials based on the technical information supplied to Spence Engineering Company, Inc.; however, the system designer and user retain final responsibility. The designer should consider applicable Codes, material compatibility, product ratings and application details in the selection and application. Improper selection, application or use of the products described herein can cause personal injury or property damage. If the designer or user intends to use the product for an application or use other than originally specified, he/she must reconfirm that the selection is suitable for the new operating conditions.

WARNING !

Steam is potentially dangerous and should be treated with respect. Any steam line which is being filled and pressurized will form condensate. The steam system must be adequately trapped to remove the condensate as it forms. **NEVER** open a reducing valve without positive indication that the high pressure side is clear of condensate.

REMOVAL OF THE ACTUATOR FROM THE VALVE BODY ASSEMBLY

Close inlet and outlet stop valves. Be sure valve body is not under pressure. Remove all accessories from the control valve. Refer to Figure 4.

Reverse Acting Actuator

Loosen stem nuts (36) and move to approximately 1/3 down valve stem. Re-tighten, being careful not to move valve stem. Energize actuator with air to lift plug off seat. Disengage packing nut (37) and lock nut (38) from bonnet (24). De-energize actuator. Actuator and yoke should move away from bonnet. Lift actuator and yoke assembly along with plug and stem assembly, off seat. With a ¼" wrench, unthread valve stem from the actuator stem (16) until valve stem is disengaged from actuator stem . Remove stem nuts, indicator, packing nut and lock nut.

Direct Acting Actuator

Energize actuator with air slightly (in case of back seating). Loosen stem nuts (36) and re-tighten approximately 1/8" away from actuator stem (16). Disengage packing nut (37) and lock nut (37) from bonnet (24). With a 1/4' wrench, unscrew valve stem from actuator stem. When valve stem reaches seat, lift actuator (to prevent galling the seat and plug). Remove stem nuts, indicator, packing nut and lock nut.

DISASSEMBLY OF THE VALVE BODY

Remove stem nuts (36), indicator (22), packing nut (37) and lock nut (38) as shown in Figure 2. Lift yoke off the bonnet (24). Remove bonnet nuts (26) and lift off bonnet flange (27), bonnet and stem and plug assembly. Remove gasket (28). A new gasket should be installed each time the valve body is disassembled. Turn stem and plug assembly out of the bonnet through packing. Replace packing if necessary. All parts should be inspected for wear and cleaned thoroughly before reassembling the valve body.

DISASSEMBLY OF THE ACTUATOR

Remove actuator from the valve. Remove regular casing bolts (4) and casing nuts (5). Gradually loosen nuts on the remaining long casing bolts (14) to allow precompression of actuator springs. Remove upper casing (2). Pull actuator stem (16), along with diaphragm (15), springs (3) and piston (13), out through bushing (7). Place a wrench on machined flats of the actuator stem and remove stem nut (10), seal washer (12) and stem washer (11). Remove o-ring (8) from the bushing and replace if necessary. Lubricate o-ring after installing.

RE-ASSEMBLY OF THE ACTUATOR

Refer to Figure 5 for correct orientation of casings, diaphragm (15), piston (13), stem (16) and springs (3) for direct or reverse action. Be sure that piston spring recesses line up between casing ribs as shown in Figure 5B for all springs except 05-13085-00 and 05-13097-00 which are assembled per Figure 5A. Note that seal washer rings and stem washer are below the diaphragm for 8-15 psi on the 36 in2 actuator as shown in Figure 6. For all other springs, the seal and stem washers are assembled above the diaphragm. Lubricate bushing o-ring (8) and insert actuator stem through the bushing. Re-attach upper casing (2) with long bolts (14) & nuts (5), tightening alternately. Install remaining casing nuts and bolts. Apply air to diaphragm case and check for leakage, full travel and dead band less than 0.2 psi.

LAPPING PLUG INTO THE SEAT

Remove old packing from the packing box with a hook type tool or with compressed air in the body. Seats and plugs should never require more than the lightest touch up with very fine (400 grit) grinding compound. Heavy lapping will produce galling, a wider seating surface and a groove in the plug, all of which tend to cause leakage. Reface a damaged surface before attempting to grind it in. Lap sparingly. Replace stem and plug assembly in bonnet (24) through packing. Apply lapping compound to the plug. Place bonnet and bonnet flange (27) on the body and tighten bonnet nuts (26) finger tight. Do not tighten packing nut (37) during the lapping operation. After lapping, disassemble and clean all parts thoroughly.

PACKING REPLACEMENT

For the Teflon V-ring packing, install the spring, washer, and packing onto plug and stem assembly on valve sub-assembly. Install o-ring followed by the packing follower and packing nut. Lubricate o-ring with silicone lubricant. For the graphite and hi-temp graphite packing, install packing o-ring followed by a washer onto plug and stem assembly on valve sub-assembly. Lubricate o-ring with silicone lubricant. Use a 1/4" schedule 40 pipe to firmly seat the o-ring into the o-ring groove. Install remaining packing, packing follower, and packing nut referring to Figure 3. Warning – stem should not be stroked without packing nut being tightened or packing o-ring may become dislodged. Forcing stem threads through installed packing will damage packing.

REPLACING THE ACTUATOR ON THE VALVE BODY

Put actuator assembly over the valve stem. Place lock nut (38), packing nut (37) and stem nuts (36) with travel indicator (22) on valve stem. Rest actuator stem (16) on valve stem. Tighten stem nuts approximately 2/3 down valve stem. Lift actuator assembly and engage valve stem with actuator stem (be careful not to gall the plug & seat).

Reverse Acting

When sufficient engagement is met, actuator can be energized with air to place yoke on the bonnet (24) and lift plug off the seat. Tighten lock nut and packing nut.

Direct Acting

Engage valve stem with actuator stem so no contact is made between plug and seat when the bottom of the yoke is rested on the bonnet. Tighten lock nut and packingnut.

ACTUATOR ADJUSTMENT

Close inlet and outlet stop valves. Be sure valve body is not under pressure. Place wrench on machined flats of actuator stem (16). Turn stem nuts (36) approximately halfway down threads of plug & stem assembly and counter the two nuts.

Reverse Acting

Apply sufficient air pressure to diaphragm case to start moving the valve through its rated travel. This is shown by the travel indicator (22). Engage lower stem nut (36) and turn plug & stem assembly into actuator stem (16) until pre-compression of actuator springs (3) is relieved (plug should not be seating on seat ring when air pressure is removed from actuator case). Apply prescribed setting pressure to actuator. This is determined by specific operating conditions. Turn plug & stem assembly out of actuator stem until plug seats on seat ring (28). To prevent galling, do not turn plug & stem assembly once plug has contacted seat ring. Turn stem nuts up plug & stem assembly and tighten to lock it in position. Reduce air signal to 0 psi and calibrate indicator scale (20). Check that full travel is achieved with a 15 psi signal, except for 20-60 psi springs.

Direct Acting

Engage lower stem nut (36) and turn plug & stem assembly into actuator stem (16) until plug & stem assembly stops at upper limit of travel and/or a slight downward movement of actuator stem is detected. Turn stem nut up the plug & stem assembly and tighten to lock in position. Calibrate indicator scale (20). Check that full travel is achieved at a 0 psi signal, except for 20-60 springs.

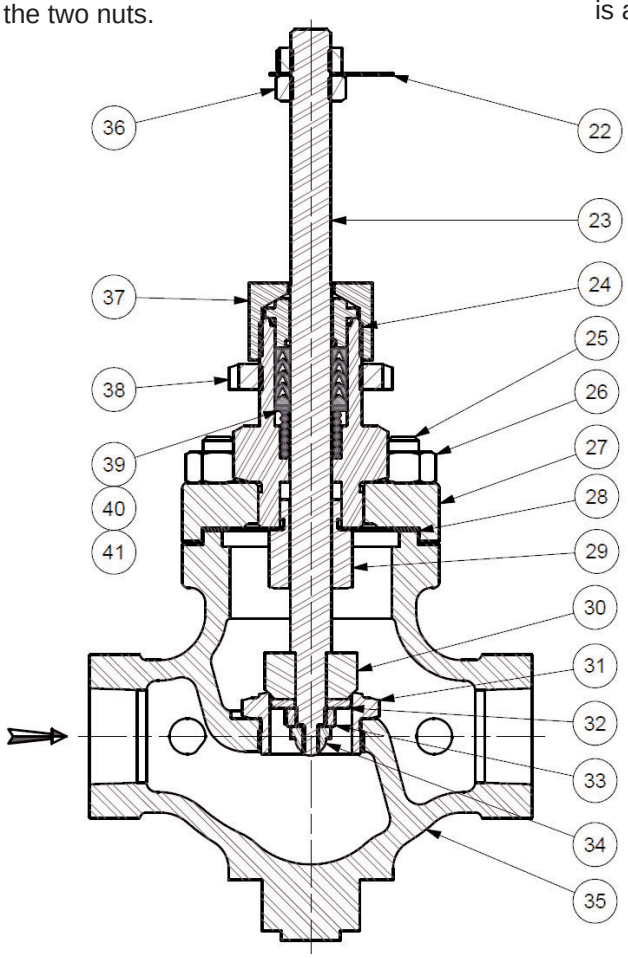

Figure 2 - Valve Body Assembly

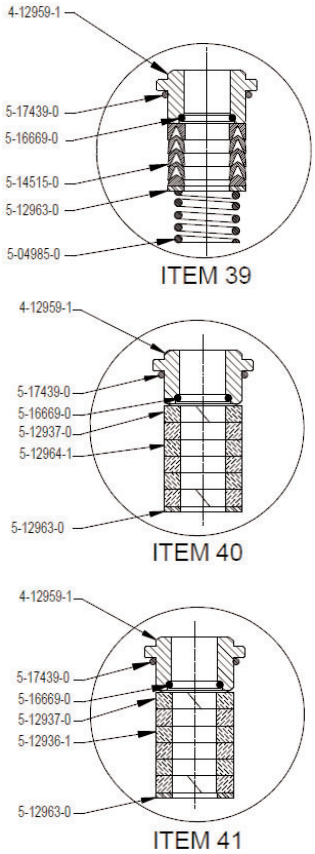

Figure 3 - Packing Assembly

VALVE BODY ASSEMBLY PART NUMBERS

ITEM NO.	PART NAME	MATERIAL	VALVE SIZE							
			1/2	3/4	1	1-1/2	2	2-1/2	3	4
22	TRAVEL INDICATOR	ALUM	05-12962-00	05-12962-00	05-12962-00	05-12962-00	05-12962-00	05-12962-00	05-12962-00	05-12962-00
23	STEM	316SS	04-18382-00	04-18383-00	04-18383-00	04-18384-00	04-18384-00	04-18385-00	04-18386-00	04-18386-00
24	BONNET	SS	04-18381-00	04-18381-00	04-18381-00	04-18381-00	04-18381-00	04-18381-00	04-18381-00	04-18381-00
25	STUD, IRON	STL	04-05516-00	04-05516-00	04-10118-00	04-05443-00	04-10119-00	04-10119-00	04-05443-00	04-10119-00
	STUD, STL	STL	05-05518-00	05-05518-00	05-05506-00	05-05507-00	05-05510-00	05-05510-00	05-05509-00	05-05509-00
26	NUT, IRON	STL	05-02847-00	05-02847-00	05-02851-00	05-02856-00	05-02860-00	05-02860-00	05-02856-00	05-02860-00
	NUT, STL	STL	05-02848-00	05-02848-00	05-02852-00	05-02855-00	05-02857-00	05-02861-00	05-02857-00	05-02857-00
27	BLIND FLANGE, IRON	IRON	04-18424-00	04-18425-00	04-18426-00	04-18427-00	04-18428-00	04-18429-00	04-18430-00	04-18431-00
	BLIND FLANGE, STL	STL	04-18432-00	04-18433-00	04-18434-00	04-18435-00	04-18436-00	04-18438-00	04-18439-00	04-18440-00
28*	GASKET	GRAPHITE	05-02361-01	05-02381-01	05-02362-01	05-02365-01	05-02366-01	05-02367-01	05-02369-01	05-02371-01
29	SPACER, IRON	SS	04-18444-00	04-18446-00	04-18443-00	04-18444-00	04-18404-00	04-18404-00	04-18444-00	04-18404-00
	SPACER, STL	SS	04-18446-00	-	04-18443-00	04-18444-00	04-18445-00	04-18404-00	04-18444-00	04-18404-00
30	DISC	420SS	04-01800-02	04-01823-02	04-01832-02	04-01870-02	04-01888-02	04-01906-01	04-07121-00	04-01931-00
31	SEAT RING	420SS	04-04066-01	04-04075-01	04-04084-01	04-04496-01	04-11593-00	04-11650-00	04-11549-00	04-11565-00
32	WASHER	-	-	-	04-18438-00	-	-	-	-	-
33	LOCK NUT	SS	05-18379-00	05-18402-00	05-18402-00	05-02971-00	05-02971-00	05-02972-00	05-02974-00	05-02974-00
34	ACORN NUT	18-8SS	05-18380-00	05-18441-00	05-18441-00	-	-	-	-	-
35	BODY, NPT	IRON	04-18391-00	04-18392-00	04-18393-00	04-18396-00	04-18399-00	-	-	-
	BODY, 125#	IRON	-	-	04-18394-00	04-18397-00	04-18400-00	04-17450-00	04-17451-00	04-17452-00
	BODY, 250#	IRON	-	-	04-18395-00	04-18398-00	04-18401-00	-	-	-
	BODY, NPT	STL	04-18405-00	04-18407-00	04-18409-00	04-18413-00	04-18417-00	-	-	-
	BODY, 150#	STL	-	-	04-18410-00	04-18414-00	04-18418-00	04-18421-00	04-18422-00	04-18423-00
	BODY, 300#	STL	-	-	04-18411-00	04-18415-00	04-18419-00	-	-	-
36	STEM NUT	STL	05-12972-00	05-12972-00	05-12972-00	05-12972-00	05-12972-00	05-12972-00	05-12972-00	05-12972-00
37	PACKING NUT	SS	04-12958-00	04-12958-00	04-12958-00	04-12958-00	04-12958-00	04-12958-00	04-12958-00	04-12958-00
38	LOCK NUT	SS	04-12961-00	04-12961-00	04-12961-00	04-12961-00	04-12961-00	04-12961-00	04-12961-00	04-12961-00
39	V RING PACKING SET	-	07-12932-00	07-12932-00	07-12932-00	07-12932-00	07-12932-00	07-12932-00	07-12932-00	07-12932-00
40	BRAIDED TFE/GRAPH PKG SET	-	07-12933-00	07-12933-00	07-12933-00	07-12933-00	07-12933-00	07-12933-00	07-12933-00	07-12933-00
41	HIGH TEMP GRAPH PKG SET	-	07-12936-00	07-12936-00	07-12936-00	07-12936-00	07-12936-00	07-12936-00	07-12936-00	07-12936-00

*** RECOMMENDED SPARE PARTS**

PRESSURE / TEMPERATURE CHARTS

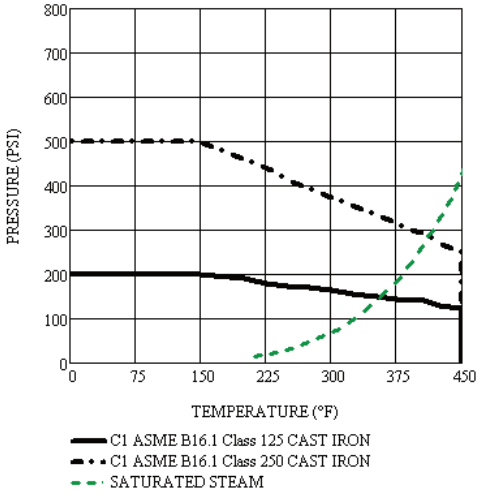

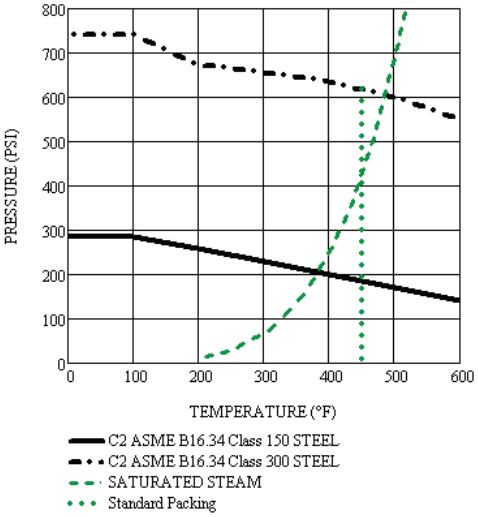

ACTUATOR ASSEMBLY PART NUMBERS

ITEM #	NAME	QTY	MATERIAL
1	VENT PLUG	1	H. D. POLY
2	UPPER CASING	1	STL/POWDER
3	SPRINGS	VARIES	STEEL
3A	SPRING RETAINER	12	STEEL
4	CASING BOLT, REGULAR	10/14	304SS
5	CASING NUT	12/16	316SS
6	LOWER CASING	1	STL/POWDER
7	BUSHING	1	BRONZE
8*	O RING	1	BUNA-N
9	YOKE	1	CI/POWDER
10*	STEM NUT	1	STEEL
11*	STEM WASHER	1	316SS
12*	SEAL WASHER	1	STEEL
13	PISTON	1	316SS
14	CASING BOLT, LONG	2	304SS
14A	CASING BOLT, LONG†	2	STL/ZINC PLATE
15*	DIAPHRAGM	1	NITRILE
16	ACTUATOR STEM	1	303SS
17	MACHINE SCREW	3	STEEL
18	CASING GASKET	1	BUNA-N
19	MACHINE SCREW	2	STEEL
20	INDICATOR SCALE	1	ALUM
21	SPECIFICATION PLATE	1	ALUM

*These parts furnished in Actuator Repair Kit.
† For spring range 10-15 on 36 sq. in. actuator and 12-15 on 60 sq. in. actuator.

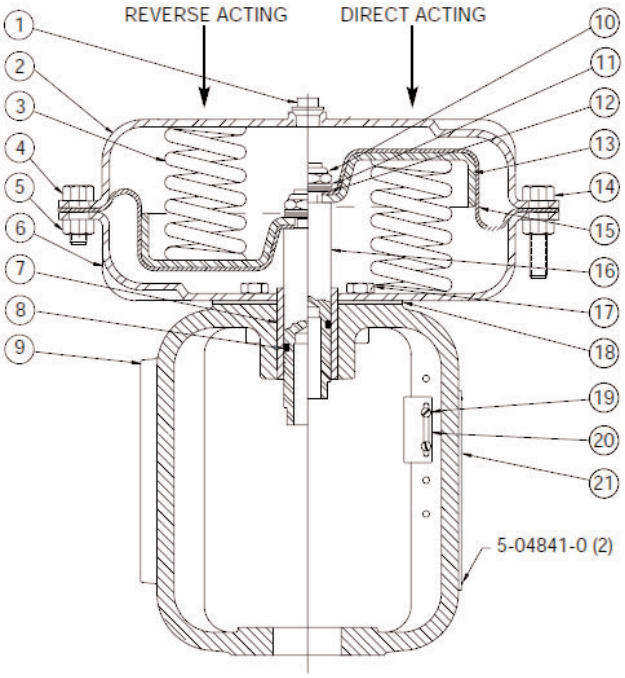

Figure 4 - Packing Assembly

ACTUATOR REPAIR KIT PART NUMBERS

36 SQ. IN.	60 SQ. IN.
51447	51448

ACTUATOR, SPRING KIT & SPRING PART NUMBERS

ACT. ASSY	SPRING KIT PN	Bench Ranges		Springs			SPRING KIT PN
		Reverse	Direct	Qty	Part #	Color	
36RC-ASM*	36RC	5 - 15	-	6	05-13090-01	RED	-
36RD-ASM*	36RD	8 - 15	3 - 10	4	05-13090-01	RED	-
36RE-ASM	36RE	10 - 15	-	6	05-13085-00	GREEN	05-04889-00
36DE-ASM	36DE	-	3 - 15	3	05-13087-00	GREEN	-
60RG-ASM	60RG	8 - 15	3 - 11	6	05-13093-01	BROWN	-
60RH-ASM	60RH	10 - 15	3 - 8	4	05-13093-01	BROWN	-
60RQ-ASM	60RQ	12 - 15	-	6	05-13097-00	BLACK	05-04889-00
60RT-ASM	60RT	22 - 30	-	6	05-13093-00	GRAY	-
60RL-ASM	60RL	20 - 60	-	6	05-13095-00	BLUE	-
				6	05-13096-00	BLUE	-

* Includes both C, J and K valve travel scales.

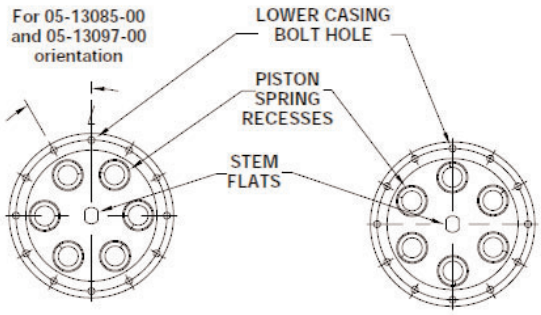

Figure 5a **Figure 5b**

Piston Diaphragm Assembly

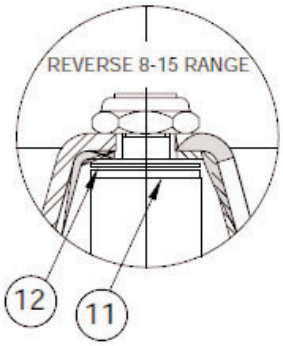

Figure 6 - Stem Assembly
Reverse 8-15 Spring Range Only